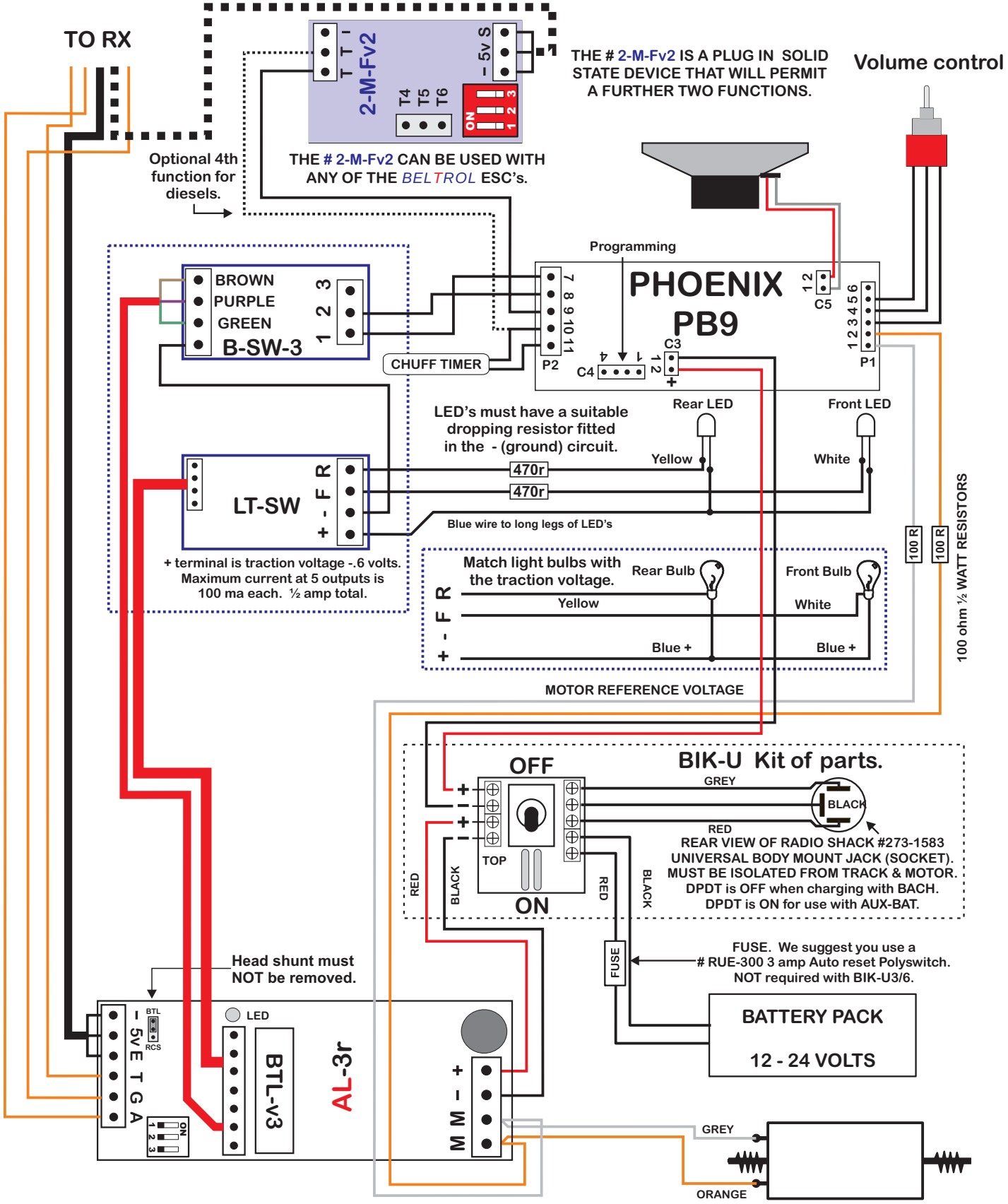WIRING THE BELTROL AL-3r ESC with PHOENIX PB9