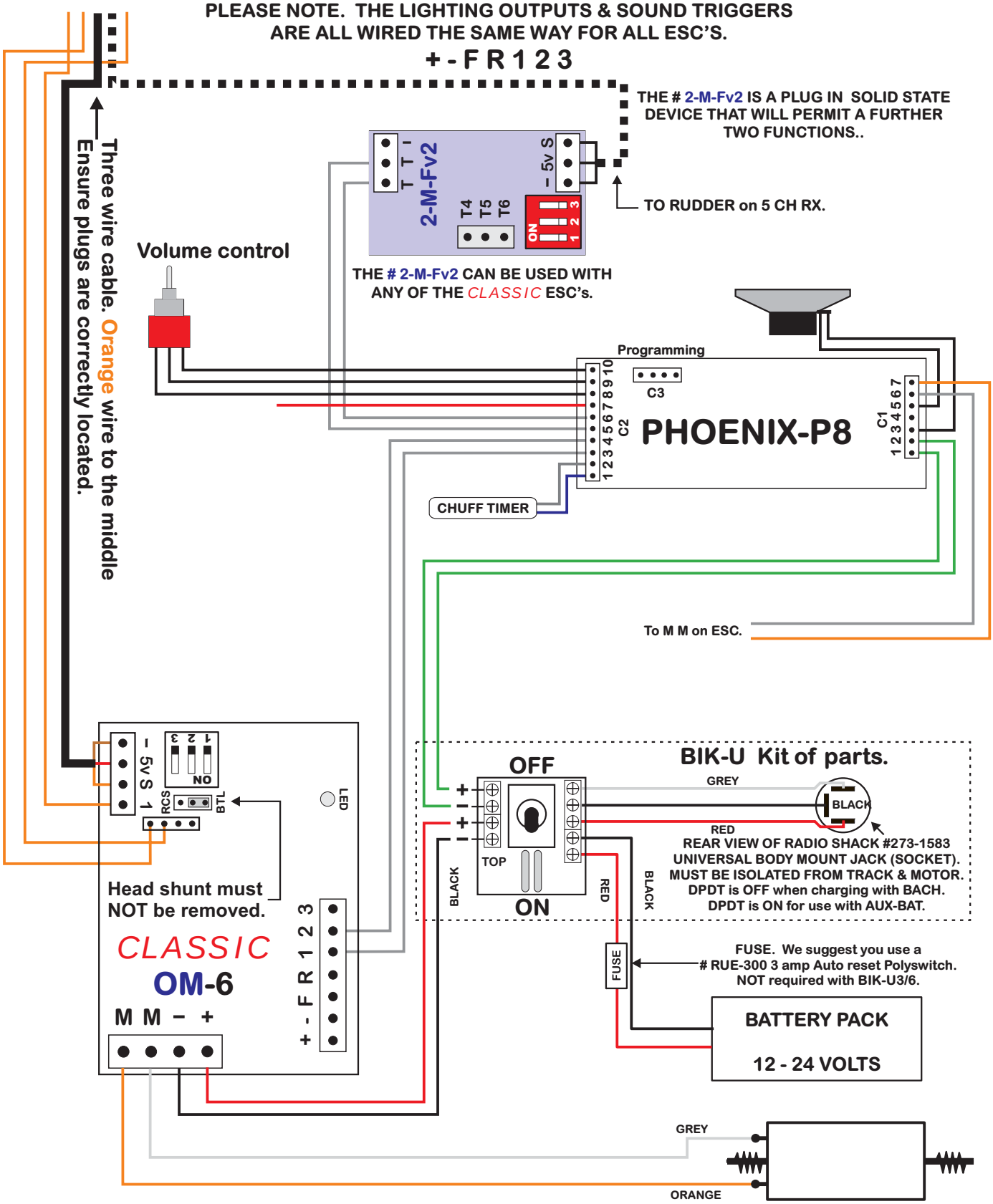WIRING THE *CLASSIC* OM-6 ESC with Phoenix P8.